Series 1750 IMU

KVH's Small Commercial IMU Solution

Key Features

- KVH's precision DSP-1750 FOGs for high reliability and stable performance
- Highly accurate 6-DOF angular rate and acceleration data
- Affordable Commercial Off-the-Shelf system (COTS)
- Flexible interfaces and compact design for drop-in replacement
- Excellent shock, vibration, and thermal performance

Applications

- Antenna, camera, laser pointing, and stabilization
- GNSS-aiding
- Autonomous vehicles
- Oil and gas exploration
- Navigation
- Motion-sensing

The Next Generation Navigation and Stabilization System

The Series 1750 IMU is the flagship of KVH's small advanced navigation and stabilization system sensor products. The Series 1750 IMU leverages the technology of the highly successful KVH DSP-1750 fiber optic gyro (FOG), the world's smallest high performance FOG integrated with very low noise MEMS accelerometers. The resulting small size and high performance of the Series 1750 IMU make it ideal for unmanned and autonomous systems or any application where size, weight, and power dissipation must be minimized.

Utilizing breakthrough proprietary algorithms, KVH designed the Series 1750 IMU to perform with extreme stability in the most demanding environments, including thermal ambient conditions, with outstanding shock and vibration performance. The high reliability of KVH FOG technology is a core feature that assures sustained IMU operation and mission success.

The Series 1750 IMU offers ease of use and high adaptability, featuring flexible RS-422 asynchronous communication with user programmable data output rates from 10 to 1000 Hz. The package dimensions and mounting features enable easy drop-in replacement. As the ability to tailor the output to exactly what the end user requires is key, KVH provides the user the opportunity to create the desired message output from both the Series 1750 IMU's fiber optic gyros and integrated accelerometers. In addition, the Series 1750 IMU offers users a high degree of flexibility as it only requires a single power supply, and the baud rate can be adjusted. This enables the user to minimize the communication latency, delivering accurate information even faster.

The KVH technology behind the Series 1750 IMU makes it ideal for precise positioning in the most challenging environments.

Vehicles and vessels of all types, such as the unmanned material handling systems shown above, use the Series 1750 IMU for precise positioning information.

Performance Specifications	
Angular Rate (FOG)	
Input Rate	±490°/s
Bias Stability	≤0.05°/hr, 1σ
Bias Offset	±2°/hr
Bias Error, Full Temp	≤1°/hr, 1σ (-40°C to +75°C)
Angle Random Walk (ARW)	≤0.013°/√hr (≤0.8°/hr/√Hz)
Scale Factor Linearity	50 ppm, 1σ
Scale Factor Error vs. Temperature	≤200 ppm, 1σ
Frequency Response (-3 dB)	≥475 Hz
Acceleration (MEMS)	
Input Range	±10 g
Bias Stability	7.5 mg (typical) <25 mg (max)
Bias Zero Offset	<50 mg, 1σ
Scale Factor Linearity	300 ppm (typical) 1000 ppm (max)
Velocity Random Walk	<0.065 ft/sec/√hr
Frequency Response (-3 dB)	≥200 Hz
Environmental	
Operating Temperature	-40°C to +75°C
Storage Temperature	-50°C to +85°C
Shock (Functional)	25 g, 11 msec, sawtooth -40°C to +75°C
Operating Vibration	8 g rms, 20 to 2000 Hz, 30 min/axis

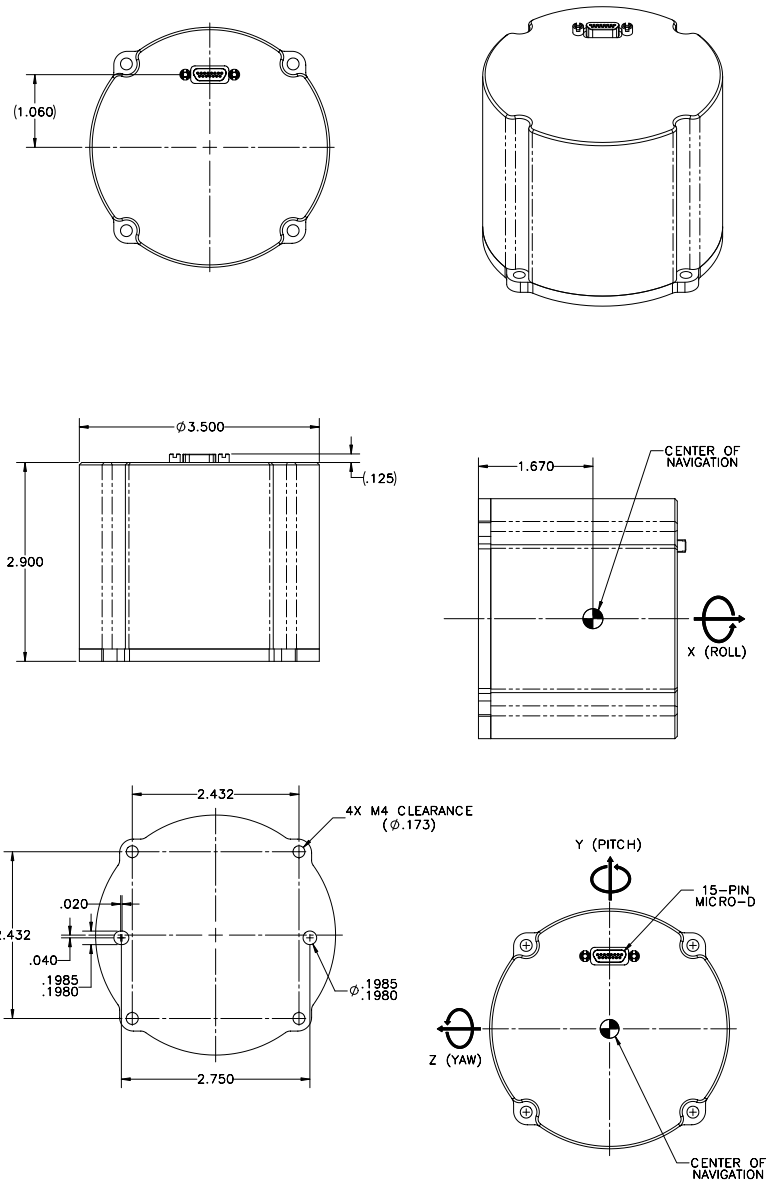

Electrical/Mechanical Interface	
Interface/Output	Asynchronous (RS-422), selectable 10 to 1000 Hz
Baud Rate	Selectable 115.2 to 921.6 kbps
IMU Activation Time	<1.5 sec
Weight	<0.64 kg
Size	88.9 mm x 73.7 mm (D x H)
Input Power	9 to 36 Vdc
Power Consumption	≤5 Watts (typical)

Very compact and lightweight, the Series 1750 IMU is designed to perform with extreme stability in challenging environments, making it ideal for such applications as high-speed gimbals mounted on manned and unmanned aerial vehicles, as well as for navigation purposes.

ISO 9001 QUALITY CERTIFIED SYSTEM

KVHI NASDAQ LISTED

KVH

www.kvh.com

Made in the U.S.A.

KVH Industries, Inc. • 50 Enterprise Center • Middletown, RI 02842-5279 • U.S.A. • Phone: +1 401 847-3327 • Fax: +1 401 845-2410

©2012, KVH Industries, Inc. Specifications subject to change without notice KVH is a registered trademark of KVH Industries, Inc.
Protected by one or more of the following U.S. and foreign patents – US 6,891,622, US 6,864,347, US 6,856,300, US 6,836,334, US 6,763,153, US 6,718,097, US 6,429,939, US 6,370,289 B1, US 6,351,310 B1, US 6,134,356, US 6,041,149, US 5,768,462, US 5,739,944, US 5,552,887, US 5,512,904, US 5,481,358, US 5,444,534, US 5,340,371, US 5,153,676, US 5,120,130, US 4,773,759, GB 2299668(B), EU 1,314,002, DE 69734809.1, DE 69722994. Additional patents pending.

DS_1750_IMU_Comm_A4_6.12